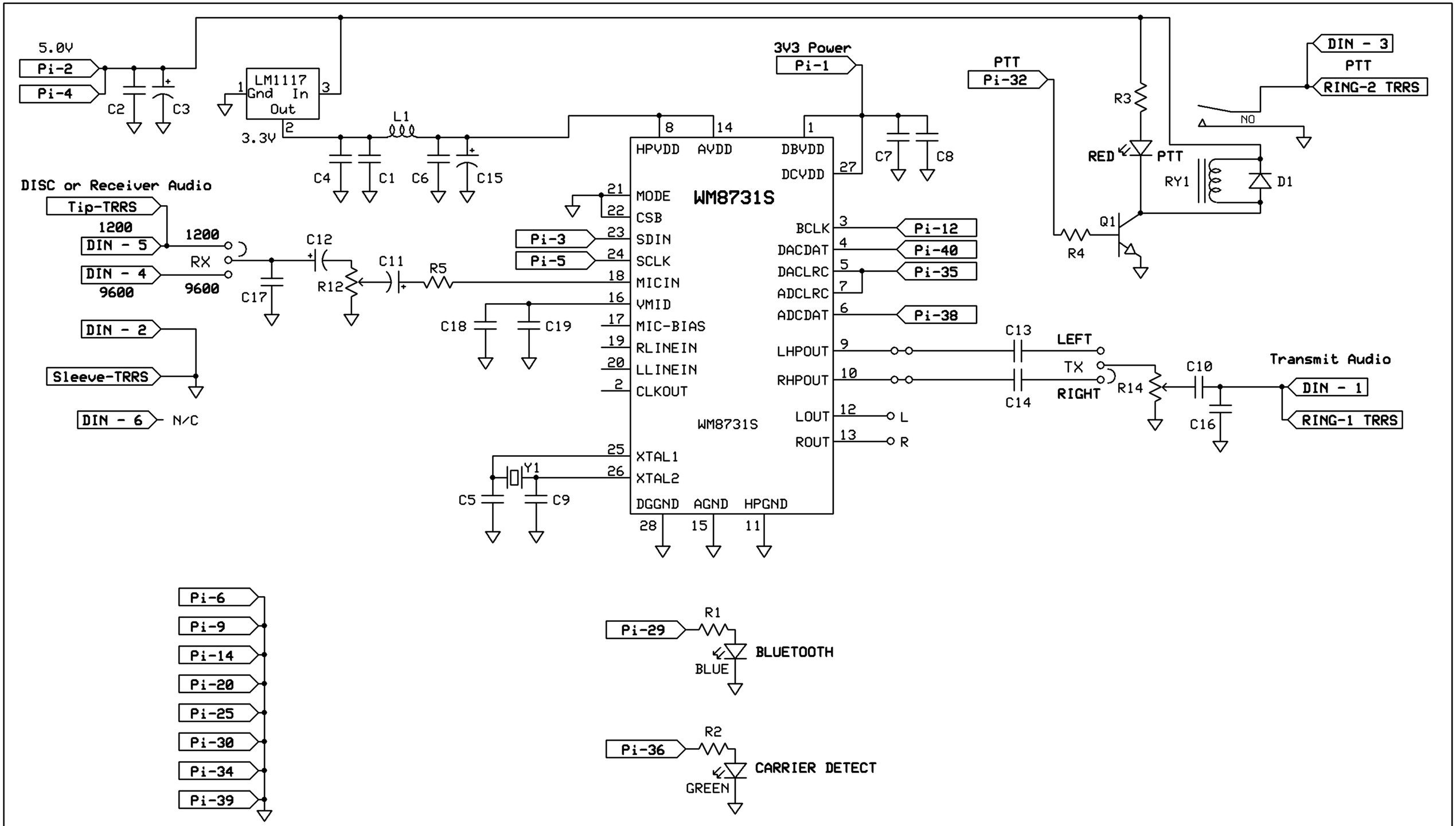

Masters Communications		
DRA-Pi-Zero		
Kevin Custer	Rev 1.0	
	7/23/2024	