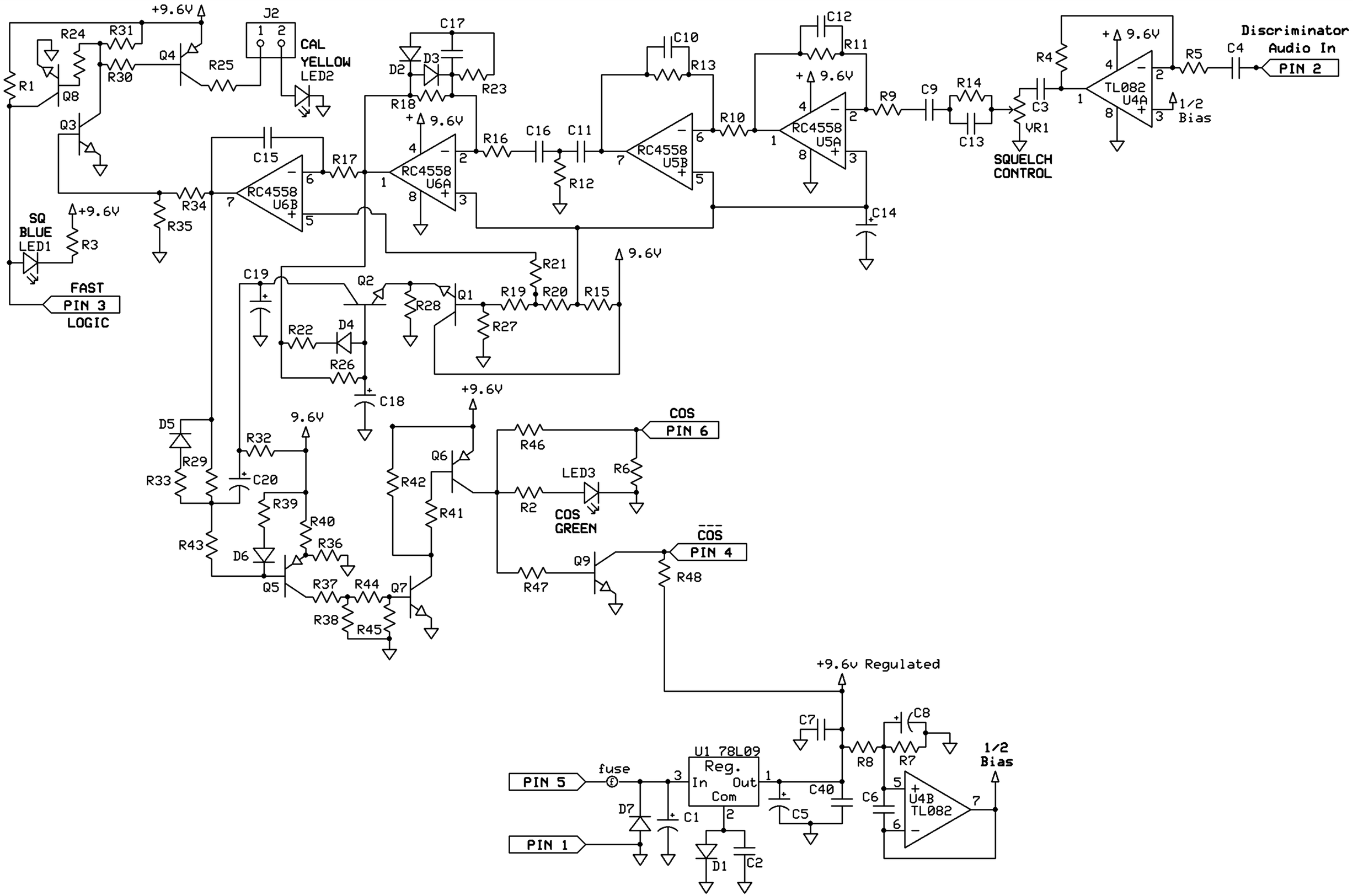


| Masters Communications | | |
|---|---|---|
| MS-50 | | |
| Desiged by: Kevin Custer | Rev 1 | Drawn by: Kevin Custer |
| | 5/28/2019 | Page #1 of 1 |