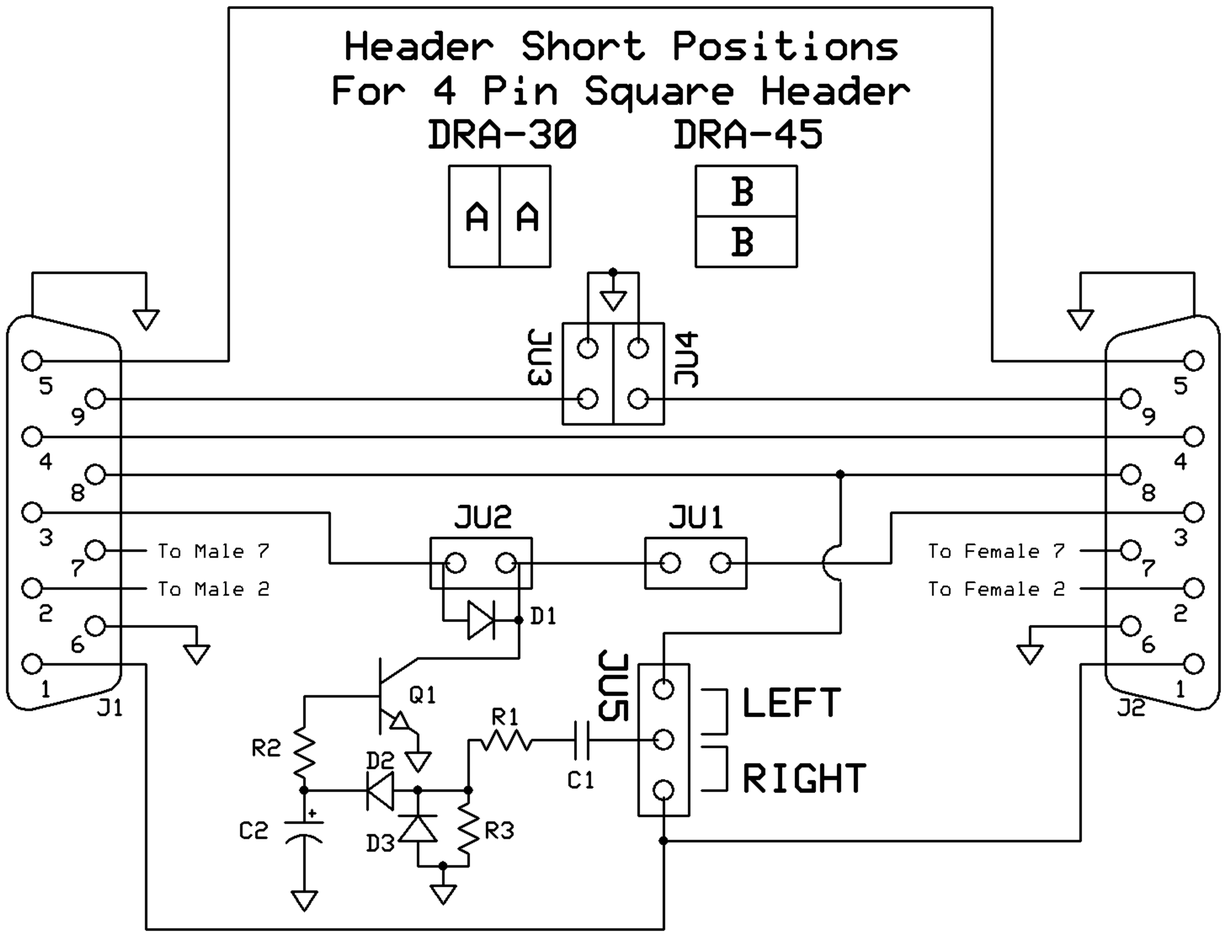

J1 - Female DB9
Radio Connector

J2 - Male DB9
To Radio Adapter

DB9 Male 2 connects to DB9 Female 2
DB9 Male 7 connects to DB9 Female 7

Masters Communications		
VOX-10		
Kevin Custer	Rev 1.0	
	4/6/2020	