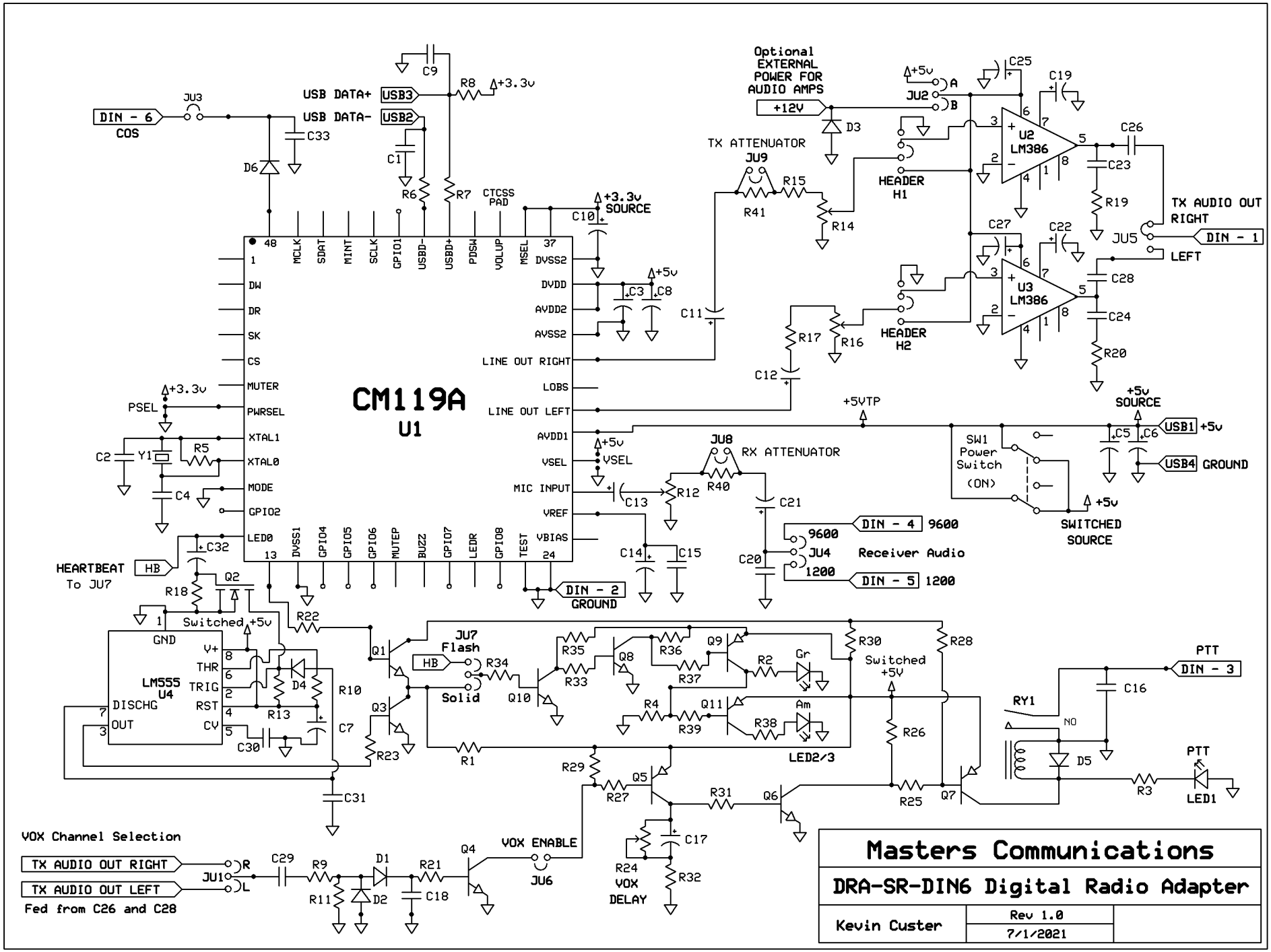
CM119A
U1
DIN - 6
COS
JU3
USB DATA+
USB DATA-
USB3
USB2
C9
R8
+3.3v
C1
R6
R7
D6
C33
CTCSS PAD
+3.3v SOURCE
C10
MCLK
SDAT
MINT
SCLK
GPIO1
USBD-
USBD+
PDSW
VOLUP
MSEL
DVSS2
DW
DR
SK
CS
MUTER
PWRSEL
XTAL1
XTAL0
MODE
GPIO2
LED0
DVSS1
GPIO4
GPIO5
GPIO6
MUTEP
BUZZ
GPIO7
LEDR
GPIO8
TEST
DVDD
AVDD2
AVSS2
LINE OUT RIGHT
LOBS
LINE OUT LEFT
AVDD1
VSEL
MIC INPUT
VREF
VBIAS
+5v
C3
C8
C11
PSEL
C2
Y1
R5
C4
C32
HEARTBEAT
To JU7
HB
R18
Q2
Switched +5v
R22
DIN - 2
GROUND
C13
R12
C14
C15
JU8
RX ATTENUATOR
R40
C21
C20
9600
JU4
1200
DIN - 4 9600
DIN - 5 1200
Receiver Audio
Optional EXTERNAL POWER FOR AUDIO AMPS
+12V
D3
JU2
A
B
TX ATTENUATOR
JU9
R41
R15
R14
HEADER H1
HEADER H2
R17
R16
C12
C25
C19
U2 LM386
C26
C23
R19
C27
C22
U3 LM386
C28
C24
R20
TX AUDIO OUT RIGHT
JU5
DIN - 1
LEFT
+5VTP
SW1 Power Switch (ON)
SWITCHED SOURCE
+5v SOURCE
C5
C6
USB1 +5v
USB4 GROUND
LM555 U4
GND
V+
THR
TRIG
RST
CV
DISCHG
OUT
D4
R13
R10
C7
C30
C31
Q1
Q3
R23
JU7 Flash
HB
Solid
R34
Q10
R35
R33
Q8
R36
R37
Q9
R2
Gr
R4
R39
Q11
R38
Am
LED2/3
R1
R29
R27
Q5
R31
Q6
R30
Switched +5V
R26
R25
Q7
R28
RY1
NO
C16
PTT
DIN - 3
D5
R3
LED1
C17
R24
VOX DELAY
R32
VOX Channel Selection
TX AUDIO OUT RIGHT
TX AUDIO OUT LEFT
Fed from C26 and C28
JU1
R
L
C29
R9
R11
D2
D1
C18
R21
Q4
VOX ENABLE
JU6
Masters Communications
DRA-SR-DIN6 Digital Radio Adapter
Kevin Custer
Rev 1.0
7/1/2021